2003 General Motors LSSV
Military Truck Owner Manual Supplement

Seats and Restraints Systems 1-1
- Troop Seats 1-2
- Restraints 1-4

Features and Controls 2-1
- Windows 2-2
- Starting and Operating Your Vehicle 2-3
- Fuel Fired Coolant Heater 2-4
- Storage Areas 2-5
- Cargo Tie-Downs 2-7
- Weapons Mount 2-8

Instrument Panel 3-1
- Exterior Lamps 3-2
- Interior lamps 3-6
- Warning Lights, Gages and Indicators . . . 3-8

Driving Your Vehicle 4-1
- Your Driving, The Road and Your Vehicle . . 4-2
- Towing 4-8

Service and Appearance 5-1
- Checking Things Under the Hood 5-2
- Vent Filters 5-10
- Replacement Bulbs 5-11
- Tires 5-11
- Appearance Care 5-12
- Vehicle Information 5-13
- Electrical Systems 5-14

Maintenance Schedule 6-1
- Maintenance Schedule 6-2

Customer Assistance Information 7-1
- Customer Assistance Information 7-2

Index 8-1

This supplement contains information that pertains to the operation of your vehicle. The sections in this supplement correspond to the sections in the 2003 C/K Owner's Manual and the 2003 Duramax Diesel Manual Supplement. This supplement, along with your owner's manual, and diesel supplement will assist you in the proper use of the vehicle.

Please keep this supplement with the owner's manual and diesel supplement in the vehicle, so it will be there if you ever need it while you're on the road.

This manual includes the latest information at the time it was printed. We reserve the right to make changes in the product after that time without notice.

Index

A good place to look for what you need is the Index in back of the manual. It's an alphabetical list of what's in the manual, and the page number where you'll find it.

Driving Your Vehicle

As with other vehicles of this type, failure to operate the vehicle correctly may result in loss of control or an accident. Refer to "Your Driving, the Road and Your Vehicle" and "Off-Road Driving with Your Four-Wheel-Drive Vehicle" in the 2003 C/K Truck Owner Manual.

Safety Warnings and Symbols

You will find a number of safety cautions in this book. We use a box and the word Caution to tell you about things that could cause personal injury if you were to ignore the warning.

⚠ CAUTION:

These mean there is something that could hurt you or other people.

© Copyright General Motors Corporation 00/00/03. All Rights Reserved. General Motors and GM are registered trademarks of General Motors Corporation.
Part No. TX017816 First Edition "Litho in USA"

In the caution area, we tell you what the hazard is. Then we tell you what to do to help avoid or reduce the hazard. Please read these cautions.
If you don't, you or others could suffer personal injury.

Vehicle Damage Warnings

Also, in this supplement manual you will find these notices:

Notice: **These mean there is something that could damage your vehicle.**

In the notice area, we tell you about something that can damage your vehicle. Many times, this damage would not be covered by your warranty, and it could be costly. But the notice will tell you what to do to help avoid the damage.

When you read other manuals, you might see CAUTION and NOTICE warnings in different colors or in different words.

You'll also see warning labels on your vehicle. They use the same words, CAUTION or NOTICE.

Section 1 Seats and Restraints

Troop Seats 1-2
To Fold the Seat Down 1-2
To Fold the Seat Up 1-3
Restraints 1-4
Rear Safety Strap 1-4

Troop Seats (If Equipped)

The troop seat kit provides space for up to eight passengers in the cargo area of the pickup model. The seats can be lowered individually for use or raised for storage. The seats lock in both the up and down positions.

Troop Seat Operation

Folding the Seat Down

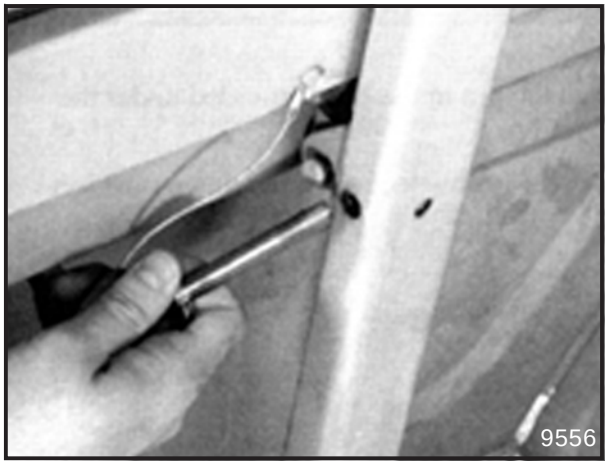

1. A quick-release pin is located on the left or right side of the troop seat leg immediately under the hinge pin.
2. When the seat is in the up position, the quick release pin will go through the left-hand leg for passenger's side seats or a right-hand leg for driver's side seats. It will then go through the seat channel and will be placed in front of the hinge pin.

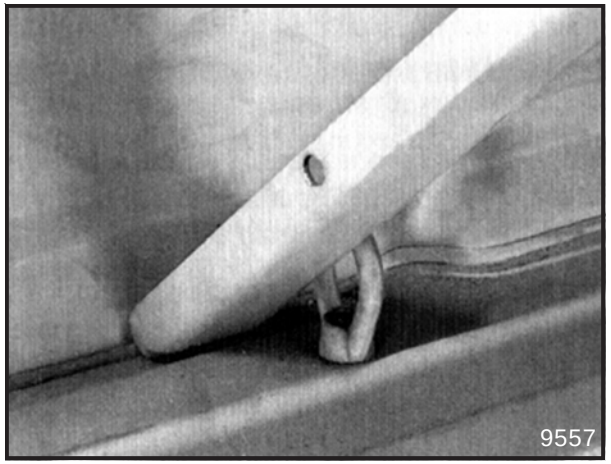

3. Remove the pin and place the legs into the joint of the truck side and the truck floor.

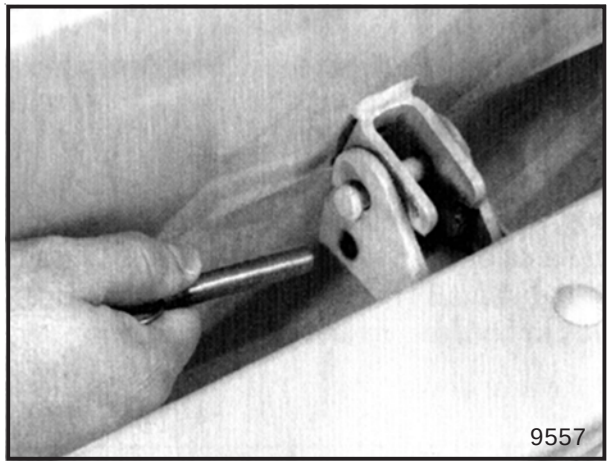

4. Place the pin in the hole provided under the hinge pin.

5. The seat is now locked in the down position.

Folding the Seat Up

Reverse Steps 1 through 5.

To remove the troop seats, refer to Seats in the 2003 LSSV Military Trucks service manual supplement.

Restraints

Rear Safety Strap

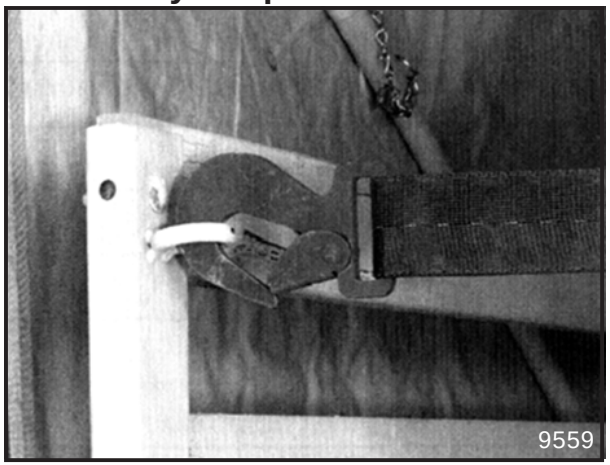

Whenever the troop seats are occupied, the safety strap should be attached across the top of the rear seat backs using the eye-bolts provided.

NOTES

Section 2 Features and Controls

Windows 2-2
Rear Topper Window 2-2
Side Topper Window 2-2
Sliding Rear Window 2-3

Starting and Operating Your Vehicle 2-3
Starting Your Engine 2-3

Fuel Fired Coolant Heater 2-4

Storage Areas 2-5
Cargo Cover (Soft Top) 2-5
Cargo Tie Downs 2-7

Weapons Mount 2-8
Floor Mount Weapons Mount 2-8
Behind Seat Weapons Mount 2-9

Windows

Rear Topper Window

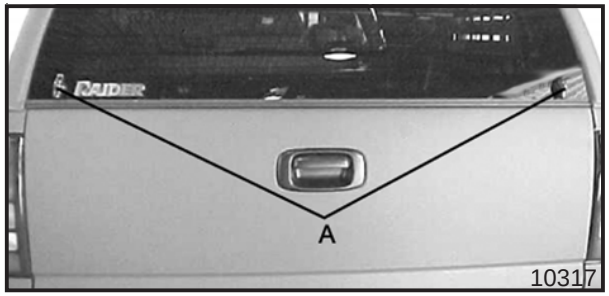

Opening the Rear Window Door

1. Turn both handles (A) clockwise 90° .
2. Pull open window door. A cylinder on both sides of window will assist with opening and hold window in the open position.

Closing Rear Window Door

1. Pull window door down.
2. Turn both handles (A) counter clockwise 90° .

Side Topper Window

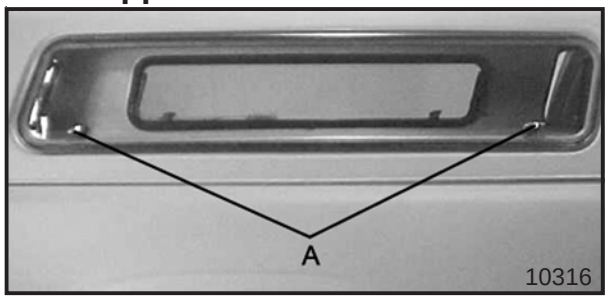

Open the Side Window Doors

1. Turn both handles (A) clockwise 90°.
2. Pull open window door. A cylinder on both sides of window will assist with opening and hold window in the open position.

Closing the Side Window Doors

1. Pull window door down.
2. Turn both handles (A) counter clockwise 90°.

Sliding Rear Window

The vehicle may be equipped with a sliding rear cab window.

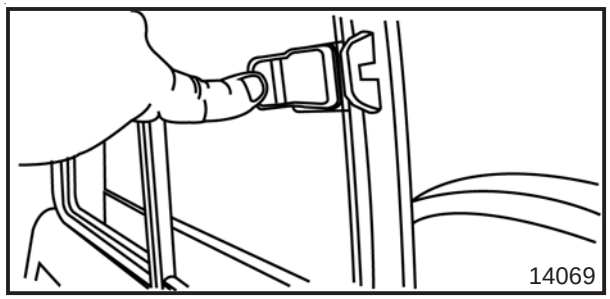

Opening the Rear Window

1. Open the latch in the center of the window.

2. Slide the window to the open position.

Closing the Rear Window

Slide the window to the closed position until the latch is fully engaged.

Starting and Operating Your Vehicle

Starting Your Engine

Your diesel engine starts differently than a gasoline engine.

CAUTION:

Do not use gasoline or starting "aids" such as ether, in the air intake. They could damage your engine. There could also be a fire, which could cause serious personal injury.

Refer to 2003 Duramax Diesel Engine Supplement located in your glove compartment.

Fuel Fired Coolant Heater

⚠ CAUTION:

<u>To Prevent Asphyxiation:</u> DO NOT operate while in confined spaces such as closed, unventilated enclosures! Open an outside enclosure door before operating the heater.

<u>To Prevent Fire:</u> DO NOT operate heater where flammable or explosive materials, gases or dusts may be present. DO NOT operate heater over dry grass or other dry ground cover. Switch heater off while refueling vehicle! Switch heater off BEFORE entering fueling stations!

<u>To Prevent Burning:</u> NEVER touch hot components of the heating system!

Your heater is a diesel powered supplementary heating system that will heat the engine coolant of your vehicle. This will prevent cold start up of the engine, it can be used in conjunction with the factory coolant heater.

Fuel Fired Coolant Heater Operation

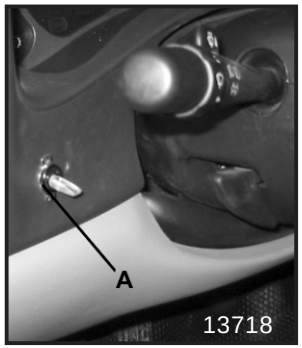

The fuel fired coolant heater is controlled by a toggle switch located on the instrument panel (I/P) bezel to the left of the steering column. The heater is activated by moving the switch (A) to the ON position. An indicator lamp will illuminate the switch. To deactivate the heater move the switch to the OFF position.

If the switch is in the ON position and flashing there is a problem with the system. Refer to the 2003 LSSV Service Manual Military Supplement.

Turn the fuel fired coolant heater OFF when not in use.

Storage Areas

Cargo Cover-Soft Top (If Equipped)

If the vehicle is equipped with a soft top cargo cover, it must be fully installed and properly anchored before traveling on the highway.
The sides of the cargo cover can be rolled up.

Rolling Up the Side Panels:

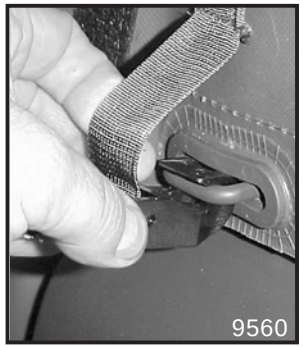

1. To release tension on hooks push release on the front of the hook.

2. Remove plastic hook from the bed fastener.

3. Unsnap the flaps on both side panels near the truck cab to expose the zipper.

4. Unzip the front and rear panels.

5. Roll the sides upward.

6. When the sides reach the top, they can be held in place by inserting the cargo cover straps in the clips at the top of the cargo cover.

Storing the Cargo Cover:

1. Release tension on hooks by pushing release on the front of the hook.
2. Remove the plastic hook from the bed fastener.

3. Unsnap the flaps on both side panels near the truck cab to expose the zipper.

4. Unzip the front and rear panels.

5. Release the two cover straps, located inside the cargo box near the truck cab, that attach the cover to the cargo box.

6. Remove the canvas cover from the cargo cover bows.

7. Fold the cover neatly and store it behind the seat in the truck cab.

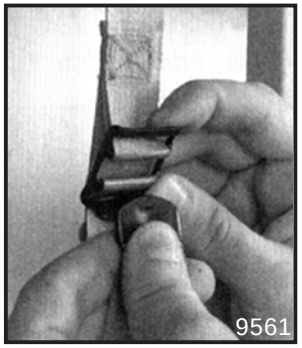

8. Release the two front and rear corner support straps.

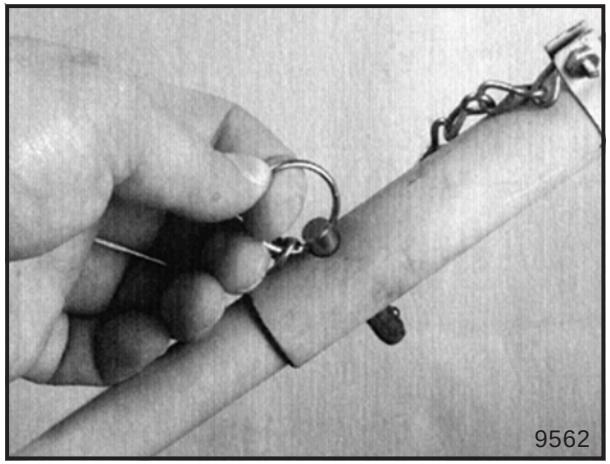

9. Remove the six quick release pins from the sides of the cargo cover bows.

10. To get the bows to stack on top of each other without striking the cab or the troop seats (if equipped), push down equally on both sides of the upper part of the front and rear bows.

11. Pull upward equally on both sides of the upper part of the center bow.

12. Standing at the rear of the vehicle, push the bows forward.

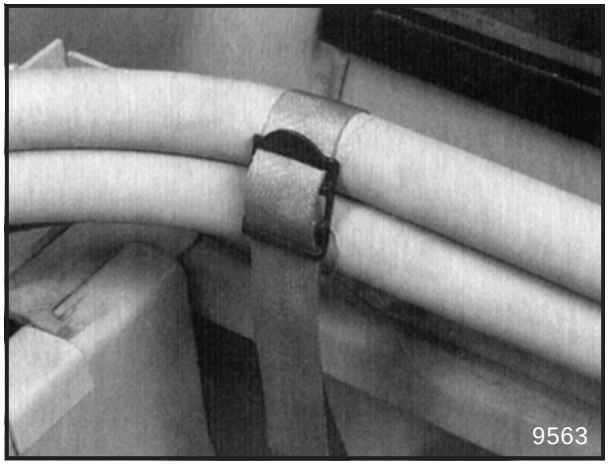

13. Secure the bows in place with the front support straps.

14. To reinstall the cargo cover, reverse Steps 1 through 13.

Cargo Tie Downs (If Equipped)

Four cargo tie downs (A) are provided on each side of the rear cargo area.

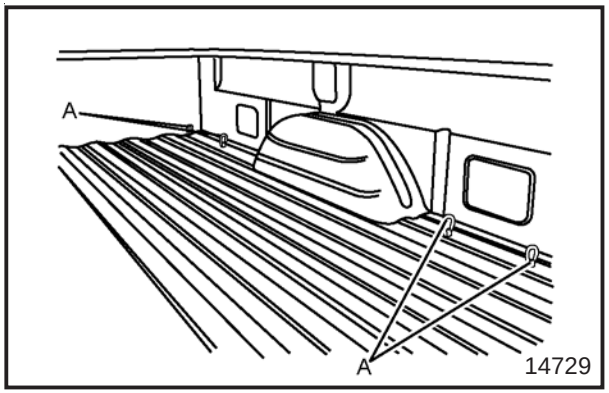

The cargo tie downs are used to strap cargo in and keep it from moving inside the cargo area.

Each of these rings are rated for a maximum pull of 660 lbs. (300 kg) upward or 450 lbs. (200 kg) of horizontal force.

Weapons Mount

Floor Mount Weapon Mount (Crew Cab)

⚠ CAUTION:

If the weapon is improperly stored, it can move around in a collision or sudden stop. People in the vehicle could be injured. Be sure to secure any such item properly. The weapon should be made safe when stored in this mount.

The floor mount weapon mount is located behind the front seats and will secure two weapons.

Mounting the Weapon

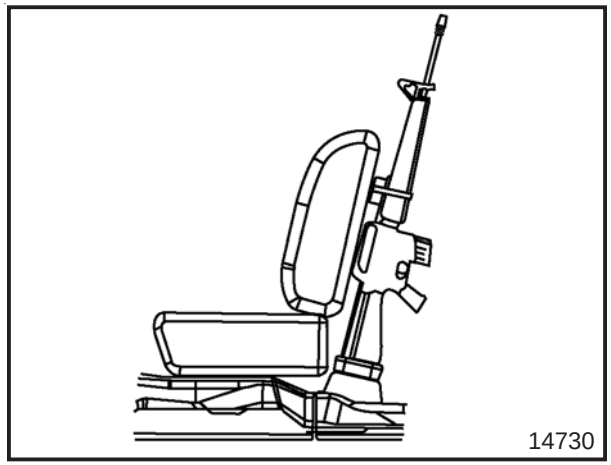

Place the stock of the weapon into the lower mount and the barrel into the upper mount until fully seated in the clamp and secure with strap.

Behind Seat Weapon Mount (Standard Cab)

Lower Weapon Holder

To secure weapons in the vehicle, first place the stock in the lower weapon support.

Upper Weapon Holder

Place the barrel into the upper weapon support. Pull the strap outward and slide it over the barrel of the rifle and secure buckle.

NOTES

Section 3 Instrument Panel

Exterior Lamps. 3-2
Service and Blackout Lighting. 3-2
Operating Service and Blackout Lighting. . .3-4

Interior Lamps. 3-6
Topper Dome Lamp. 3-6

Warning Lights, Gages and Indicators. 3-8
24-Volt Voltmeter. 3-8

Exterior Lamps

Service and Blackout Lighting

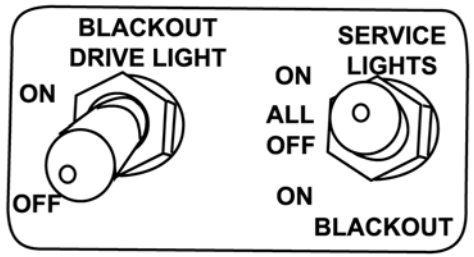

13870

Service Lights/Blackout Control

This switch located on the blackout switch panel next to the 24-volt voltmeter is the service lights/blackout control.

With the Ignition Switch in the ON Position:

1. Pull the switch outward then push upward to the service ON position. All normal service lamps will be operational with normal controls.

2. Move the service light/blackout switch to the center OFF position. All lamps and accessory power to the vehicle will turn off.

3. Move the switch to the blackout position, the following will occur:
   - The blackout lighting system will be operative.
   - The front and rear marker lamps will illuminate.
   - The blackout stop lamps will illuminate when the brakes are applied.
   - The instrument panel warning lights will remain functional.
   - The hazard lights will remain functional.
   - The horn will not be functional.

The vehicle's military 12-pin and commercial 8-pin trailer wiring connectors and trailer lamps are also controlled by this switch.

Blackout Drive Light

The switch located on the blackout switch panel next to the service light switch is the blackout drive light control.

The service lights/blackout control switch must be in blackout position or in the down position for the blackout drive lights to function.

With the ignition switch in the ON position:

1. Pull the switch outward then UP to the ON position, the front blackout drive lamp will activate.

2. Pull the switch outward then DOWN to the OFF position, the blackout drive lamp will deactivate.

3. The switch will return to the center position automatically after you release it from either the ON or OFF position.

Operating Service and Blackout Lighting

Exterior Lamp or Device	Service Lights/Blackout Switch	Blackout Drive Light Switch
Headlamps and Taillamps	SERVICE ON	OFF
Parking Lamps	SERVICE ON	OFF
Front/Rear Side Marker Lamps	SERVICE ON	OFF
Marker Lamps; Roof, Fender and End Gate	SERVICE ON	OFF
Stop Lamps	SERVICE ON	OFF
Back-Up Lamps	SERVICE ON	OFF
License Plate Lamp	SERVICE ON	OFF
Front/Rear Turn Signals	SERVICE ON	OFF
Hazard Warning Lamps	SERVICE ON	ON/OFF
Cargo Lamp (If Equipped)	SERVICE ON	OFF
Horn	SERVICE ON	OFF
Front/Rear Blackout Marker Lamps	BLACKOUT	ON/OFF
Blackout Stop Lamps	BLACKOUT	ON/OFF
Blackout Drive Lamp (Headlamp)	BLACKOUT	ON

Exterior Lamp or Device	Service Lights/Blackout Switch	Blackout Drive Light Switch
Instrument Panel/Switch Illumination	SERVICE ON	OFF
Radio/Clock Illumination*	SERVICE ON	OFF
Headlamp High-Beam Indicator	SERVICE ON	OFF
Turn Signal/Hazard Warning Indicators	SERVICE ON	OFF
Four-Wheel-Drive Indicator	SERVICE ON	OFF
Dome/Courtesy Lamps	SERVICE ON	OFF
Glove Compartment Lamp	SERVICE ON	OFF
Warning Chime: Headlamps On, Instrument Cluster Warning Lights*	SERVICE ON	ON/OFF

* Clock numerals and DRL indicator will remain illuminated.

Mechanical Device	Service Lights/Blackout Switch	Blackout Drive Light Switch
Automatic Transmission Shift lock Control	SERVICE ON	ON/OFF
Torque Converter Lockup Clutch	SERVICE ON	ON/OFF

Interior Lamps

Topper Dome Lamp

The fiberglass topper dome lamp is controller by a master switch on the side of the dome lamp and a pair of 3-way switches.

With Blackout Lighting

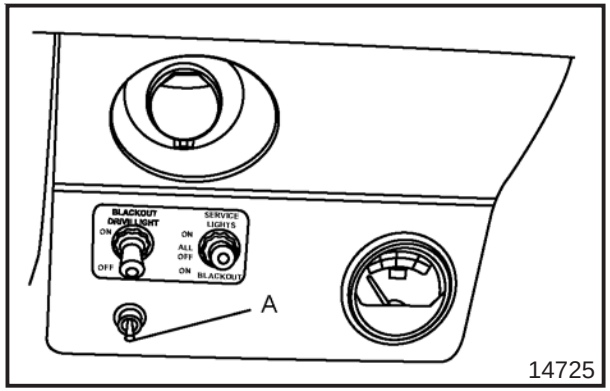

The interior 3-way switch (A) is located on the blackout switch panel.

Without Blackout Lighting

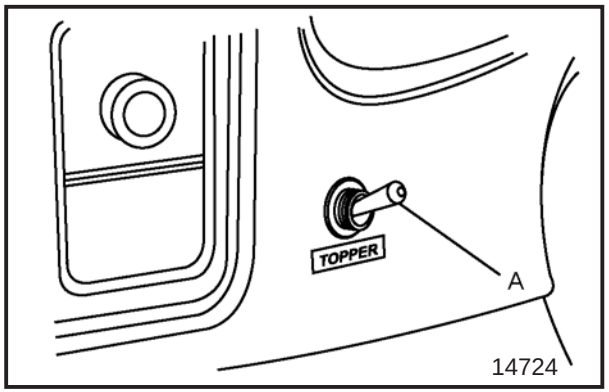

The interior 3-way switch (A) is located on the instrument panel (I/P) bezel to the left of the steering column.

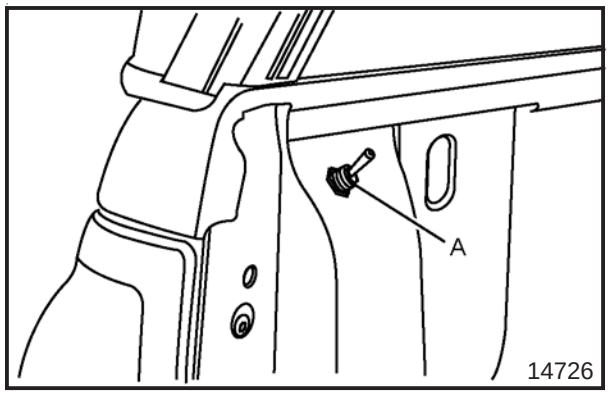

The bed mounted 3-way switch (A) is located in the left rear of the cargo bed.

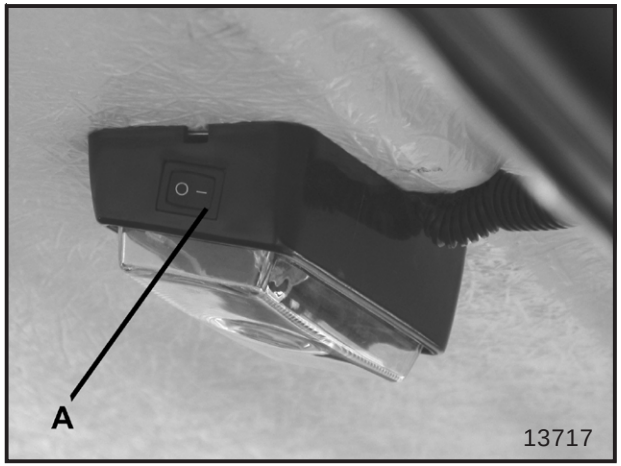

The topper mounted master switch (A) is located on the rear center of the topper roof. If the master switch is turned OFF the following will occur:

- The interior mounted 3-way switch will not function.
- The bed mounted 3-way switch will not function.

The dome lamp will not function in the blackout position.

Warning Lights, Gages and Indicators

24-Volt Voltmeter

The 24-volt voltmeter is located in the instrument panel next to the service and blackout lighting switch.

Load Reading

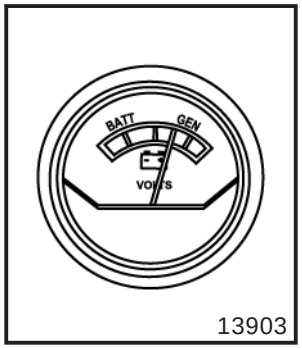

The voltmeter needle should be in the green band during normal load operation. If the needle is not in the green band, the fuse may have blown. If the fuse is not blown and the system still does not work properly, report it to your maintenance support.

No Load Reading

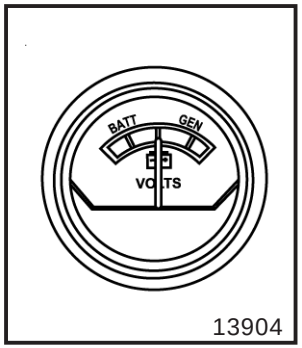

The voltmeter needle should be between the yellow and the green bands in a no load situation.

NOTES

Section 4 Driving Your Vehicle

Your Driving , the Road and Your Vehicle. . . 4-2
Loading Your Vehicle. 4-2
Winch. 4-3
Winch Accessory Kit. 4-4
If You Are Stuck: In Sand, Mud, Ice or Snow. . . . 4-5
Using The Clevis/Towing Provisions. 4-5

Towing. 4-8
Towing Your Vehicle. 4-8
Towing a Trailer. 4-8

Your Driving, The Road and Your Vehicle

Loading Your Vehicle

CAUTION:

Do not load your vehicle any heavier than the GVWR, or either the maximum front or rear GAWR. If you do, parts on your vehicle can break, or it can change the way your vehicle handles. These could cause you to lose control. Also, overloading can shorten the life of your vehicle.

Notice: **Your warranty does not cover parts or components that fail because of overloading.**

Make sure that all cargo is properly secured to prevent the load from shifting. All loads must be distributed evenly over the axle and secured to the tie-down rings provided. Refer to “Loading Your Vehicle” in the Index of the 2003 C/K Truck Owner’s Manual for more information on vehicle loading.

If the vehicle is equipped with troop seats, you can carry up to eight passengers. Passengers must stay seated at all times.

Winch (If Equipped)

Multi-Mount

The multi-mount winch has 9,000 lbs (4 082 kg) of single line pull. The multi-mount slides into the hitch receiver and allows you to move and operate the winch from the front or the back of vehicle.

Refer to WARN industries operator's manual in the vehicle glove compartment for additional instructions and warnings.

Multi-Mount Winch Storage

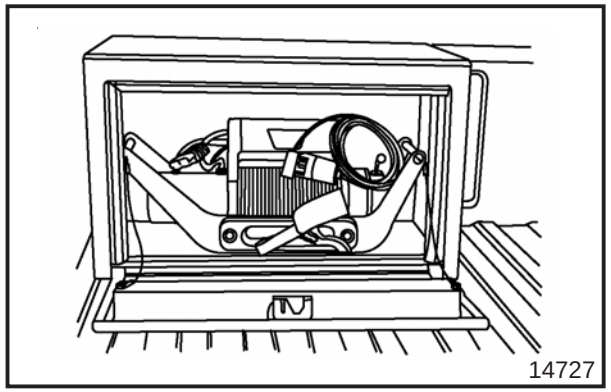

The multi-mount winch is stored in a locking storage box located in the upper middle of the cargo area. The winch is secured in the box by four floor mounted eye bolts.

Permanent Mount

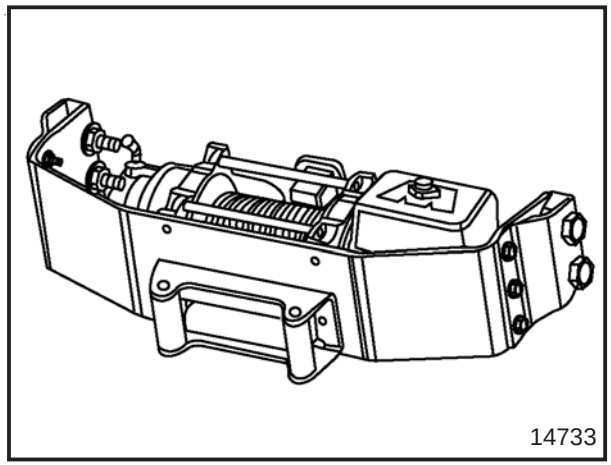

The winch is electrically powered from the vehicle batteries. The permanent mount winch has 12,000 lbs (5 440 kg) of single line pull.

Refer to WARN industries operator's manual in the vehicle glove compartment for additional instructions and warnings.

Control Of Your Winch

The winch is controlled by the hand held remote control to allow the operator to stand clear while controlling the winching process. The remote control provides control of the forward or reverse rotation of the spooling drum. The winch will only work with the remote.

How the Winch Reacts to Load

The winch is rated at maximum pulling capacity. This occurs on the first layer of wire rope on the drum. As the layers increase, the pulling power decreases. Exceeding the winch capacity could cause the winch to fail or the wire rope to break.

Winch Accessory Kit

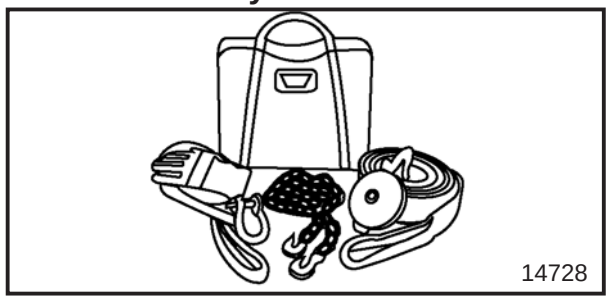

The Winch Accessory Kit Contains the Following Items:

- **Tow Hooks:** Secure porperly to your vehicle's frame, tow hooks provide an attachment point for wire rope, straps, and chains.

- **Clevis/D-Shackles:** The D-Shackle is a safe means for connecting the looped ends of cables, straps and snatch blocks.

- **Snatch Block:** Used properly, the multi-purpose 24,000 lbs (10 886 kgs) snatch block allows you to do he following:
  - Increase your winch's pulling power.
  - Change your pulling direction without damaging the wire rope.

- **Choker Chain:** Can be used to hook-up to another vehicle or sharp objects for an anchor point.

- **Gloves:** Wire rope, through use, will develop "barbs" which can slice skin.

- **Recovery Straps:** Used to "snatch" or pull out a stuck vehicle.

- **Tree Truck Protector:** Use this with a clevis/ d-shackle to secure the wire rope to an anchor point.

If You Are Stuck: In Sand, Mud, Ice or Snow

Using the Clevis/Towing Provisions

The vehicle is equipped with two clevises on the front and rear ends of the vehicle.

⚠ CAUTION:

The clevises when used, are under a lot of force. Always pull the vehicle straight out. Never pull on the clevises at a sideways angle. The clevises could break off and people could be injured from the chain or cable snapping back.

When recovering the vehicle, you should determine the direction of the recovery by the distance required to free the vehicle and the surrounding terrain.

Secure the towing cable to both front or rear clevises with a V-device to gain an even pull on both anchor points and avoid damage to the vehicle.

Front Clevis/Towing Provisions

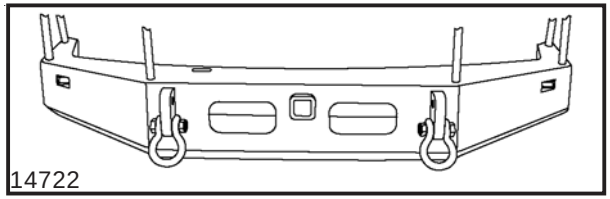

Rear Clevis/Towing Provisions

Factory Bumper

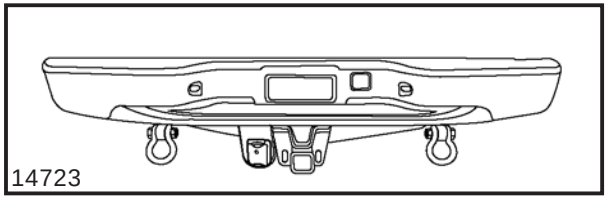

Military Bumper

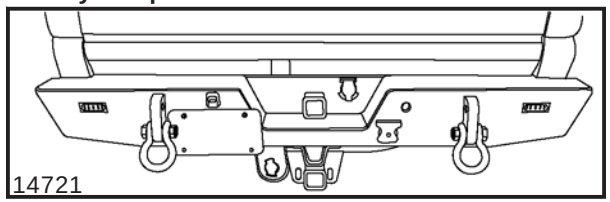

Maximum Allowable Loads on Each Clevis/Towing Shackle

Regular Cab Models

Load Direction	Factory Bumper	Military Bumper
Forward-Front		15,000 lbs (6 803 kg)
Rearward-Rear		
Upward-Front		10,000 lbs (4 535 kg)
Upward-Rear		
Down-Front		10,000 lbs (4 535 kg)
Down-Rear		

Crewcab Models

Load Direction	Factory Bumper	Military Bumper
Forward-Front		15,000 lbs (6 803 kg)
Rearward-Rear		
Upward-Front		10,000 lbs (4 535 kg)
Upward-Rear		
Down-Front		10,000 lbs (4 535 kg)
Down-Rear		

Towing

Towing Your Vehicle

When towing the vehicle, you should always use a properly equipped wrecker/recovery vehicle. Refer to "Towing Your Vehicle" and "Recreational Vehicle Towing" in the Index of the 2003 C/K Truck Owner's Manual for further information on towing the vehicle.

Notice: **The steering wheel must be secured properly with the appropriate wheel-locking device to keep the wheel in the straight position. The vehicle transfer case must be in NEUTRAL (N).**

Towing a Trailer

Your vehicle is equipped for towing a trailer.

Notice: **Do not exceed the maximum allowable weight your vehicle is designed to carry. Exceeding the maximum allowable weight may cause damage to your vehicle.**

Refer to "Towing a Trailer" in the Index of the 2003 C/K Truck Owner's Manual for more information on trailer towing.

Your vehicle is equipped with a pintle hitch for towing a trailer. You must not exceed the maximum trailer weight towing capacity for that vehicle. Refer to the following chart to find the maximum trailer weight for your vehicle.

Weight of the Trailer

Vehicle	Bumper	Maximum Trailer Weight	GCWR*
Regular Cab Model	Factory		
	Military		
Crew Cab Model	Factory		
	Military		

*The Gross Combination Weight Rating (GCWR) is the total allowable weight of the completely loaded vehicle and trailer including any passengers, cargo, equipment and conversion. The GCRW for your vehicle should not be exceeded.

Towing capacity is limited by the military hitch, not vehicle performance.

Towing capacity must be reduced when trailer towing is used in ON/OFF road conditions.

Pintle Hitch

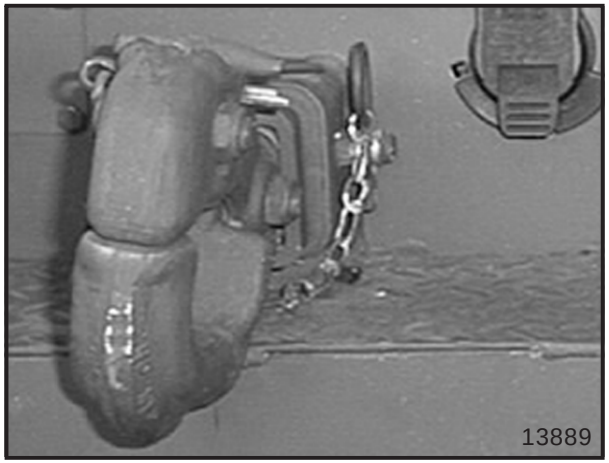

A pintle hitch is located at the rear of the vehicle, and is removable from the receiver.

Operating the Pintle Hitch:

1. Rotate the hitch so that the T-handle faces upward.

2. Remove the locking pin from the side of the hitch.

3. Pull the T-handle upward to open the jaw of the hitch.

4. Lift the upper part of the hitch upward.

5. Attach the trailer tongue to the lower part of the hitch.

6. Push the jaw of the hitch downward then pull upward to make sure the hitch is secured.

7. Insert the locking pin into the hole on the side of the hitch.

Removing the Pintle Hitch:

1. Remove spring clip from retaining pin.

2. Remove retaining pin from receiver.

3. Pull the pintle hitch out of receiver.

Installing the Pintle Hitch:

1. Remove any debris from the inside of the receiver.
2. Push pintle hitch (B) into the receiver.
3. Install retaining pin (C) into the receiver and the pintle hitch (B).
4. Install spring clip (A) into the retaining pin (C).

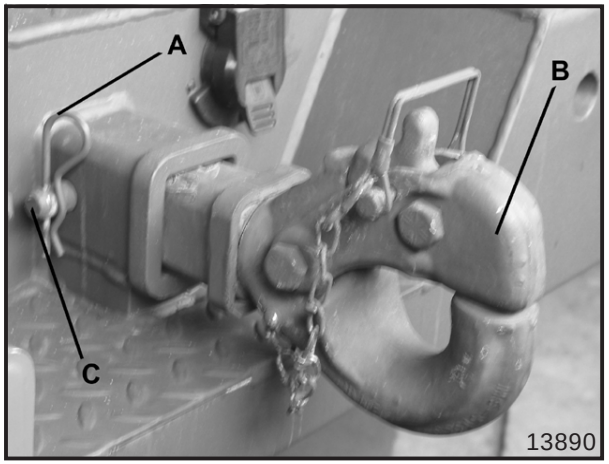

Trailer Wiring Connector

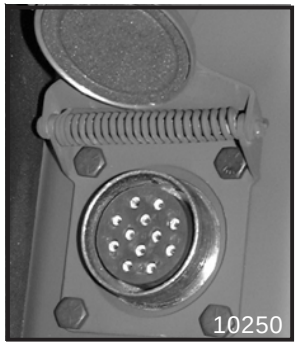

On the military bumper the NATO standard 12-pin trailer lamp and brake connector is located on the rear bumper between the clevis/tie-down and the pintle hitch.

On the factory bumper the NATO standard 12-pin trailer lamp and brake connector is located on the rear trailer hitch to the left of the pintle hitch.

When connecting a trailer wiring harness to the connector, make sure the dog ears of the connector are properly aligned when inserting it into the connector.

Trailer Connector Adapter

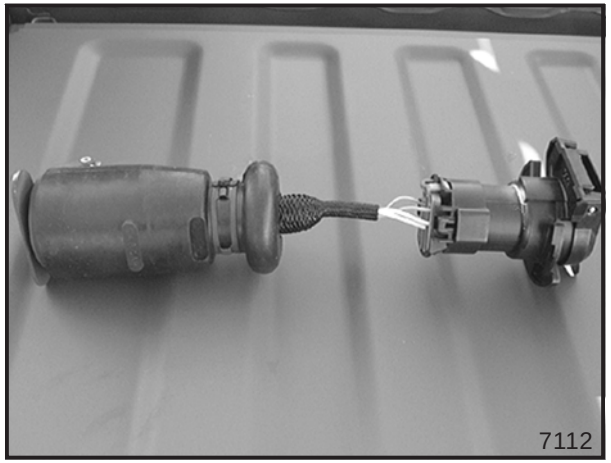

When connecting to a commercial trailer with an 8-pin connector, the adapter must be used. This adapter allows you to connect an 8-pin trailer wiring harness into the vehicles 12-pin connector.

This adapter is located in the vehicle glove compartment.

NOTES

Section 5 Service and Appearance Care

Checking Things Under The Hood. 5-2
Engine Compartment Overview. 5-2
Jump Starting. 5-3

Vent Filters. 5-10
Rear Axle Vent-Tube Filter. 5-10
Transfer Case Vent-Tube Filter. 5-10
Front Axle Vent-Tube Filter. 5-10

Replacement Bulbs. 5-11
Tires. 5-11
Changing a Flat. 5-11
Inflation-Tire Pressure. 5-12

Appearance Care. 5-12
Cleaning The Outside of Your Vehicle. . . . 5-12

Vehicle Information. 5-13
Shipping Data Plate. 5-13
Government Vehicle Data Plate. 5-13

Electrical System. 5-14
Fuses and Circuit Breakers. 5-14

Checking Things Under The Hood

Engine Component Overview

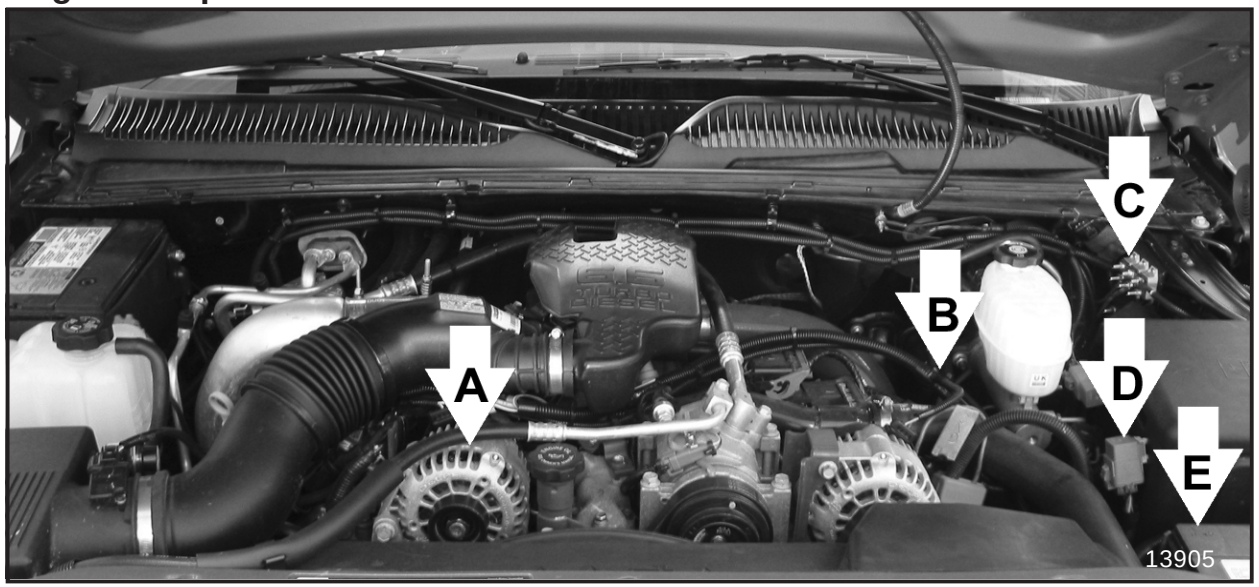

The following items are military options that may be found on the vehicle.

A. 24-Volt Generator
B. 24-Volt Generator Circuit Breakers
C. Circuit Breakers
D. 24-Volt Relay
E. 24-Volt Battery

Jump Starting

If the battery (or batteries) on the vehicle have run down and the vehicle will not start, you may want to use another vehicle to provide power to start the vehicle.

NATO slave cables are the only recommended method for 24-volt jump starting of the vehicle. You should only use NATO slave cables to jump start similar vehicles.

Heavy duty jumper cables can be used to jump start the 12-volt system. Refer to Jump Starting from a 12-volt System.

Jump Starting from a 12-Volt System

⚠ CAUTION:

Batteries can hurt you. They can be dangerous because:

- **They contain acid that can burn you.**
- **They contain gas that can explode or ignite.**
- **They contain enough electricity to burn you.**

If you do not follow these steps exactly, some or all of these things can hurt you.

Notice: **Ignoring these steps could result in costly damage to your vehicle that would not be covered by your vehicle warranty. Trying to start your vehicle by pushing or pulling it will not work, and it could damage your vehicle.**

This procedure applies only to the 12-volt battery located on the passenger's side of the vehicle.

1. Get the vehicles close enough so the jumper cable scan reach, but be sure the vehicles are not touching each other. If they are, it could cause a ground causing vehicle not to start. The bad grounding could damage the electrical systems.

   To avoid the possibility of the vehicles rolling, set the parking brake firmly on both vehicles involved in the jump start procedure. Put the automatic transmission in PARK (P). Be sure the transfer case is in a drive gear and is NOT in NEUTRAL (N).

2. Turn off the ignition on both vehicles. Unplug unnecessary accessories plugged into the cigarette lighter or accessory power outlets. Turn off all lamps that are not required as well as radios. This will avoid sparks and help save both batteries. In addition, it could save your radio!

   Notice: **If you leave your communications/ navigation equipment on, there is a risk that they could be badly damaged. The repairs wouldn't be covered by your warranty.**

3. Ensure the jumper cables do not have loose or missing insulation. If they do, you could get shocked. The vehicles could be damaged too.

4. Open the hoods and locate the batteries. Find the positive (+) and negative (-) terminals on each battery.

⚠ CAUTION:

Using a open flame near a battery can cause battery gas to explode. People have been hurt doing this, and some have been blinded. Use a flashlight if you need more light.

Be sure the batteries have enough water. You don't need to add water to the Delco Freedom battery (or batteries) installed in every new GM vehicle. But if a battery has filler caps, be sure the right amount of fluid is there. If it is low, add water to take care of that first. If you do not explosive gas could be present.

Battery fluid contains acid that can burn you. Do not get it on you. If you accidentally get it in your eyes or on your skin, flush the place with water and get medical help immediately.

⚠ CAUTION:

Fans or other moving engine parts can injure you badly. Keep your hands away from moving part once the engine is running.

5. Connect the positive (+) cable to the positive (+) side of the 12-volt battery (12-volt side) of the vehicle with the dead battery.

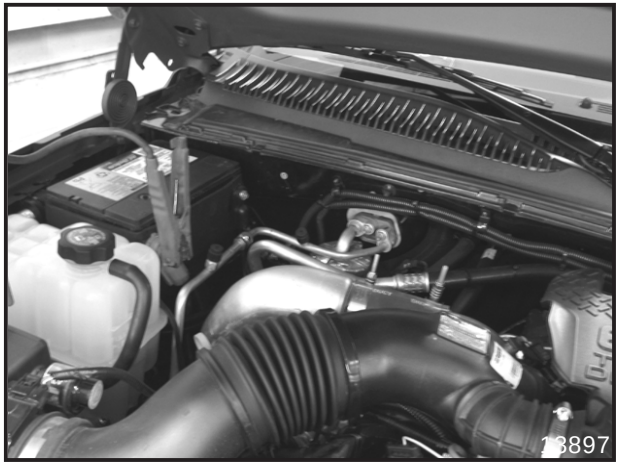

6. Connect the positive (+) cable to the positive (+) side 12-volt system of the vehicle with the good battery.

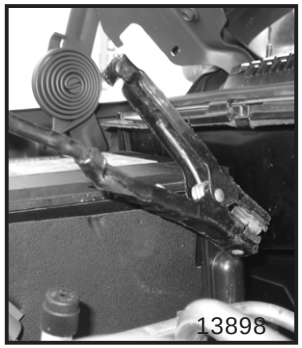

7. Connect the negative (-) cable to the negative (-) post of the 12-volt system of the vehicle with the good battery.

Do not let the other end touch anything until the next step. The other end of the negative (-) cable does not go to the dead battery. It goes to a heavy unpainted metal part of the engine in the vehicle with the dead battery.

8. Attach the cable at least 45 cm (18 in) away from the dead battery, but not near engine parts that move. The electrical connection is just as good there, but the chance of sparks getting back to the battery is much less.

9. Start the vehicle with the good battery.
   Allow the vehicle to charge for 10 minutes before attempting to start the vehicle.

   Note: It may take up to 30 minutes to charge the battery pending on the battery's state of charge.

10. Start the vehicle with the dead battery.

11. Remove the cables in reverse order to prevent electrical shorting. Take care that they do not touch each other or any other metal.

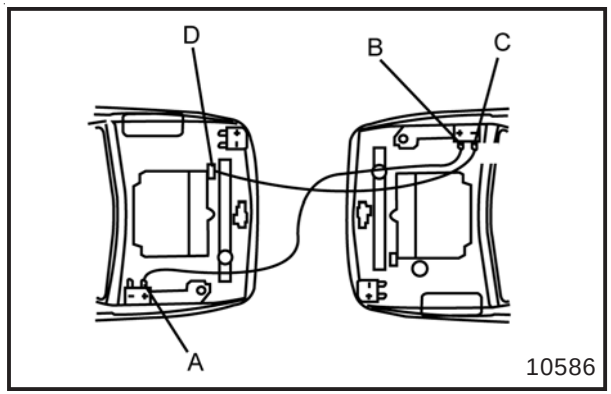

A . 12-Volt Positive (Dead Battery)

B. 12-Volt Positive (Good Battery)

C. 12-Volt Negative (Good Battery)

D. Engine Ground (Dead Battery)

If this procedure does not work, you will need to disconnect the 24-volt side battery and charge it alone for 10 minutes. Replace the battery and repeat the jump starting procedures as outlined.

Note: This procedure should only be performed by your maintenance section.

Slave Starting

CAUTION:

Batteries can hurt you. They can be dangerous because:

- **They contain acid that can burn you.**
- **They contain gas that can explode or ignite.**
- **They contain enough electricity to burn you.**

If you do not follow these steps exactly, some or all of these things can cause personal injury.

Notice: **Ignoring these steps could result in costly damage to your vehicle that wouldn't be covered by your vehicle warranty. Trying to start your vehicle by pushing or pulling it will not work, and it could damage your vehicle.**

You should only use the NATO slave receptacle and slave cable when performing this operation.

1. Get the vehicles close enough so the slave cable can reach, but be sure the vehicles are not touching eachother. If they are, it could cause a ground connection causing your vehicle not to start, and the bad grounding could damage the electrical systems.

   To avoid the possibility of the vehicles rolling, set the parking brake firmly on both vehicles involved in the jump start procedure. Put the automatic transmission in PARK (P). Be sure the transfer case is in a drive gear and is NOT in NEUTRAL (N).

2. Turn off the ignition on both vehicles. Unplug unnecessary accessories plugged into the cigarette lighter or accessory power outlets. Turn off all lamps that aren't needed as well as radios. This will avoid sparks and help save both batteries. In addition, it could save your radio!

Notice: **If you leave your communications/ navigation equipment on, they could be badly damaged. The repairs will not be covered by your warranty.**

3. Locate the slave receptacles on both vehicles and unscrew the cover.

⚠ CAUTION:

Using a open flame near a battery can cause battery gas to explode. People have been hurt doing this, and some have been blinded. Use a flashlight if you need more light.

Be sure the batteries have enough water. You don't need to add water to the Delco Freedom® battery (or batteries) installed in every new GM vehicle. But if a battery has filler caps, be sure the right amount of fluid is there. If it is low, add water to take care of that first. If you do not, explosive gas could be present.

Battery fluid contains acid that can burn you. Do not get it on you. If you accidentally get it in your eyes or on your skin, flush the place with water and get medical help immediately.

⚠ CAUTION:

Fans or other moving engine parts can injure you badly. Keep your hands away from moving parts once the engine is running.

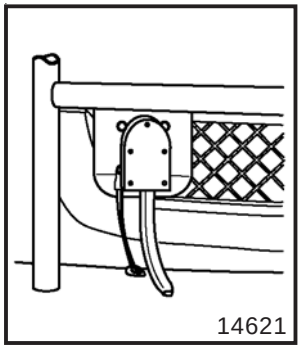

4. Connect the slave cable to the vehicle with the dead battery.

5. Start the vehicle with the good battery.

6. Connect the slave cable to the vehicle with the good battery.

7. Allow the vehicle with the dead battery to charge for 10 minutes.

   Note: It may take up to 30 minutes to charge the battery pending on its state of charge.

8. Start the vehicle with the dead battery.

9. Remove the slave cable in the reverse order that it was installed. Take care not to let the cable ends touch each other or any other metal.

Vent Filters

Rear Axle Vent-Tube Filter

The rear axle vent-tube filter is located on the vent hose that is attached to the top of the axle housing.

Refer to the Maintenance Schedule to determine how often to inspect the filter and when to change it. Refer to Front/Rear Axle Inspection.

Transfer Case Vent-Tube Filter

The transfer case vent-tube filter is located on the driver's side of the transfer case housing.

Refer to the Maintenance Schedule to determine how often to inspect the filter and when to change it. Refer to Transfer Case Inspection.

Front Axle Vent-Tube Filter

The front axle vent-tube filter is located in the engine compartment near the left inner wheel well.

Refer to the Maintenance Schedule to determine how often to inspect the filter and when to change it. Refer to Front/Rear Axle Inspection.

Bulb Replacement

Lamp	Bulb Number
Blackout Headlamp	1073
Topper Dome Lamp	194
24-Volt Gage Lamp	194
License Plate Lamp	194

Note: The bulbs in the blackout tail/stop lamp and front marker lamps are light emitting diodes (LED) instead of incandescent bulbs. They are not replaceable and are serviced as an assembly. For bulb replacement refer to the 2003 LSSV Military Trucks Service Manual Supplement.

Tires

Changing a Flat

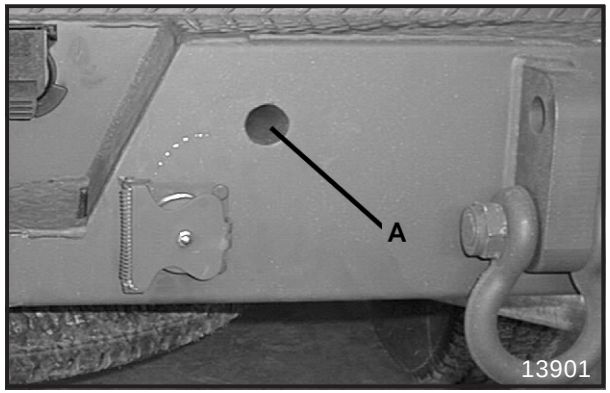

The military heavy duty bumper of the vehicles have an opening (A) to gain access to the spare tire hoist. For more information see “Changing a Flat Tire” in the 2003 C/K Truck Owner’s Manual.

Inflation - Tire Pressure

Tire pressure should be within the manufacturer's recommended range as indicated on the certification/ tire label which is on the drivers door edge. When hauling heavy loads the pressure should be at the maximum allowable pressure.

Refer to "Inflation-Tire Pressure" in The 2003 C/K Truck Owner's Manual for additional information on tire inflation pressure.

Appearance Care

Cleaning the Outside of the Vehicle

Wash the vehicle using only mild soap and water. Do not use cleaning agents that are petroleum based, or that contain acid or abrasives. All cleaning agents should be flushed promptly and not allowed to dry on the surface. Do not towel dry or wax the paint surface.

Cleaning The Soft Top (Cargo Cover)

The cargo cover is a rain resistant canvas top.

Areas with mildew should be cleaned by scrubbing with a dry brush. Never use solvents. If necessary to use water to remove dirt, it should not be used until the mildew has been removed. After removing the mildew, examine the fabric and look for deterioration. If the canvas has deteriorated, replace it. Refer to cargo cover replacement in the 2003 LSSV Military Trucks Service Manual Supplement.

Vehicle Information

Shipping Data Plate

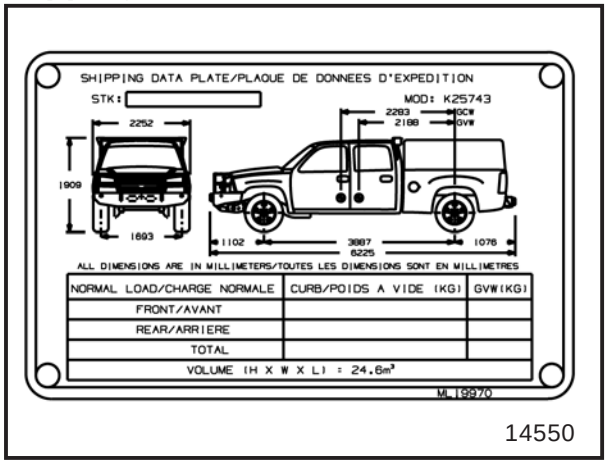

The data plate is used to inform the owner of the vehicle as to the make, model, Gross Vehicle Weight (GVW), and vehicle dimensions. It is located on the left front inner door panel.

Government Vehicle Data Plate

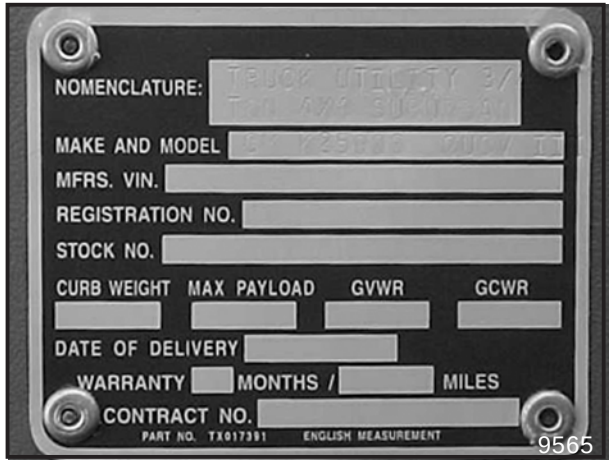

The data plate used to inform the owner of the vehicle as to the upfitting information and other specifications. It is located on the left front inner door panel.

Electrical System

Fuses and Circuit Breakers

Circuit breakers protect the power accessories. When the current load is too heavy, the circuit breaker opens and closes, protecting the circuit until the problem is fixed or goes away.

24-Volt Circuit Breakers

These circuit breakers are on the left rear fender support bracket of the engine compartment.

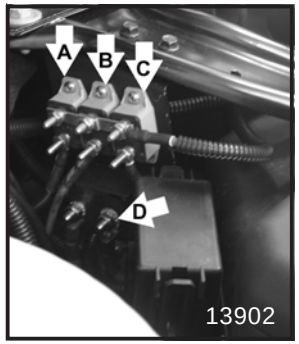

A. 24-Volt Stud on Equalizer
B. 24-Volt Stud on Equalizer Cover
C. Fuel Fired Heater
D. Auxiliary Items

24-Volt Power Source (Battery Equalizer)

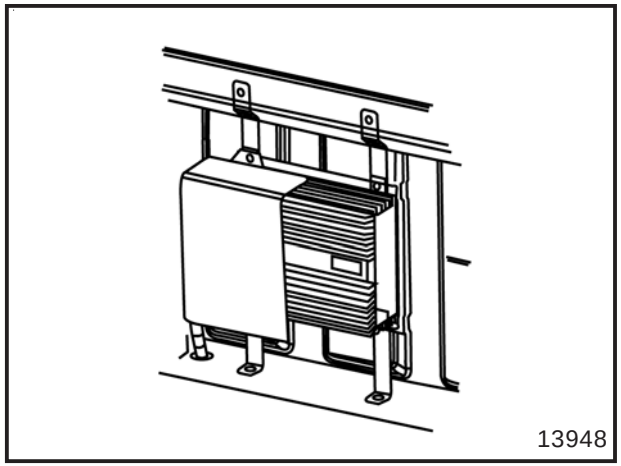

The battery equalizer is located on the left rear of the cab. The primary function of the battery equalizer is to maintain battery balance or equalization charge in a predominately 24-volt system which requires regulated 12-volt power. The battery equalizer can deliver up to 100 amps of continuous 12-volt current for practically any 12-volt or 24-volt load such as two way radios, navigations or the 24-volt batteries.

NOTES

Section 6 Maintenance Schedule

Maintenance Schedule. 6-2
Front/Rear Axle Inspection. 6-2
Transfer Case Inspection. 6-2
Fuel Fired Coolant Heater Inspection. 6-3
Winch Inspection. 6-3

Maintenance Schedule

Front/Rear Axle Inspection

Inspect the front/rear axle fluid level and add as needed. Inspect the constant velocity joints and axle seals for leakage.

The front and rear axles are equipped with an in-line filter on the vent tubes. Inspect the filters for blockages and replace as needed. Refer to “Front Axle” and “Rear Axle” in the Index for further information on the location of the front and rear axle filters. Refer to “Maintenance Schedule” in The 2003 C/K Truck Owner’s Manual for additional maintenance information on the vehicle.

Transfer Case Inspection

Inspect the transfer case fluid levels and add lubricant if necessary. On manual shift transfer case, oil the control lever pivot point and all exposed control linkage.

The transfer case is equipped with an in-line filter on the vent tube. Inspect the filter for blockages and replace as needed. Inspect vent hose at the transmission and transfer case for kinks and proper installation. Refer to “Transfer Case Vent-Tube Filter” in the Index for further information on the location of the filter. Refer to “Maintenance Schedule” in The 2003 C/K Truck Owner’s Manual for additional maintenance information on the vehicle.

Fuel Fired Coolant Heater Inspection

The heater requires no periodic maintenance other than a visual inspectionby a qualified technician preferably prior to the cold weather use. The technician can ensure the heater and all components are free from damage and in proper working condition.

During the warmer months of the year when heating is not required, the heater should be switched ON and allowed to run for 5 to 10 minutes once a month as a minimum. This will keep a clean, fresh supply of fuel in the heater fuel system and keep all moving parts in top operating condition.

For troubleshooting information refer to 2003 LSSV Military Trucks Service Manual Supplement.

Winch Inspection

Inspect the wire rope before and after each winching operation. If the wire rope has become kinked or frayed, the wire rope needs to be replaced. Be sure to also inspect the winch hook and hook pin for signs of wear or damage. Replace if necessary.

Inspect the remote control for damage, if equipped. Refer to the WARN industries operator's manual in the vehicles glove compartment for additional inspections and maintenance.

NOTES

Section 7 Customer Assistance Information

Customer Assistance Information. 7-2
Contact Information. 7-2

Customer Assistance Information

For customer assistance phone numbers, refer to Contact Information.

To assist in our review of your concerns, provide the following information:

- The Vehicle Identification Number. (This will be on the VIN plate in the cab of the vehcile.)
- Current mileage on the vehicle.
- Nature of the porblem.

Contact Information

Department	Phone Number
GM Customer Assistance Center (general information, dealer location, other concerns):	1-800-263-3777
Roadside Assistance Center (towing and all Roadside Assistance program services):	1-800-268-6800

Mailing Address:

GM Defense
Military Trucks
MC: 483-A19-A24
100 GM Renaissance Center
P.O. Box 100
Detroit, MI 48265

NOTES

Section 8 Index

Appearance Care. 5-12
Cleaning the Soft Top (Cargo Cover). 5-12
Cleaning the Outside of the Vehicle. 5-12

Blackout Drive Light 3-2

Cargo Cover -Soft Top 2-5
Cargo Tie Downs. 2-7
Changing a Flat. 5-11
Checking Things Under the Hood 5-2
Engine Component Overview. 5-2
Jump Starting. 5-3
Jump Starting from a 12-Volt System. 5-3
Slave Starting. 5-8
Cleaning the Outside of the Vehicle. 5-12
Cleaning the Soft Top (Cargo Cover). 5-12
Customer Assistance Information. 7-2
Contact Information. 7-2

Driving Your Vehicle. ii

Electrical System. 5-14
Fuses and Circuit Breakers. 5-14
24-Volt Circuit Breakers. 5-14
24-Volt Power Source. 5-2
Engine Component Overview. 3-2
Exterior Lamps. 3-2
Service and Blackout Lighting. 3-2
Blackout Drive Lamp. 3-2
Operating Service and Blackout Lighting. . . .3-3

Fold Seats Down 1-2
Fold Seats Up. 1-3
Front Axle Vent-Tube Filter. 5-10
Front Clevis/Towing Provisions. 4-5
Front/Rear Axle Inspection. 6-2
Fuel Fired Coolant Heater. 2-4
Fuel Fired Coolant Heater Operation. 2-4
Fuses and Circuit Breakers. 5-14
Fuel Fired Coolant Heater Inspection. 6-3

Government Vehicle Data Plate. 5-13

If you're Stuck: In Sand, Mud, Ice or Snow 4-6
Using the Clevis/Towing Provisions. 4-6
Front Clevis/Towing Provisions. 4-6
Rear Clevis/Towing Provisions. 4-6
Maximum Allowable Loads On Each Clevis/
Towing Shackle. 4-7
Inflation-Tire Pressure. 5-12
Install the Pintle Hitch. 4-10
Interior Lamps 3-6
Topper Dome Lamp. 3-6

Jump Starting 5-3
Jump Starting from a 12-Volt System. 5-3

Loading Your Vehicle 4-2

Maintenance Schedule. 6-2
Front/Rear Axle Inspection. 6-2
Transfer Case Inspection. 6-2
Fuel Fired Coolant Heater Inspection 6-3
Winch Inspection 6-3
Maximum Allowable Loads on Each Clevis/Towing Shackle. 4-7
Mount the Weapon. 2-8
Multi-Mount Winch. 4-3

Operate the Pintle Hitch. 4-10
Operating Service and Blackout Lighting. 3-4

Permanent Mount Winch. 4-4
Pintle Hitch. 4-10
To Operate the Pintle Hitch. 4-10
To Remove the Pintle Hitch. 4-10
To Install the Pintle Hitch. 4-11

Rear Axle Vent-Tube Filter. 5-10
Rear Clevis/Towing Provisions. 4-6
Rear Topper Window 2-2
Remove the Pintle Hitch. 4-10
Replacement Bulbs. 5-11
Restraints 1-4
Rear Safety Strap. 1-4

Safety Warnings and Symbols. ii
Service and Blackout Lighting. 3-2
Side Topper Window 2-2
Sliding Rear Window. 2-3
Staring and Operating Your Vehicle 2-3
Starting Your Engine 2-3
Storage Areas. 2-5
Cargo Cover-Soft Top 2-5

Tires. 5-11
Changing a Flat. 5-11
Inflation-Tire Pressure 5-12
Topper Dome Lamp. 3-6
Towing 4-8
Towing Your Vehicle 4-8
Towing a Trailer 4-8
Weight of the Trailer 4-9
Trailer Connector Adaptor. 4-12
Trailer Wiring Connector. 4-11
Transfer Case Inspection. 6-2
Transfer Case Vent-Tube Filter. 5-10
Troop Seats. 1-2
Fold Seats Down. 1-2
Fold Seats Up. 1-3
24-Volt Circuit Breakers. 5-14
24-Volt Power Source. 5-14
24-Volt Voltmeter. 3-8

Using Clevis/Towing Provisions. 4-6

Vehicle Damage Warnings. iii
Vehicle Information. 5-13
Government Vehicle Data Plate. 5-13
Shipping Data Plate. 5-13
Vent Filters. 5-10
Rear Axle Vent-Tube Filter. 5-10
Transfer Case Vent-Tube Filter. 5-10
Front Axle Vent-Tube Filter. 5-10

Warning Lights, Gages and Indicators. 3-8
24-Volt Voltmeter. 3-8
Weapons Mount 2-8
Floor Mount Weapons Mount. 2-8
Behind Seat Weapons Mount. 2-9
Weight of the Trailer. 4-9
Winch Accessory Kit. 4-5
Winch. 4-3
Winch Storage. 4-3
Multi-Mount. 4-3
Control Of Your Winch. 4-5
How the Winch Reacts to Load. 4-5
Windows. 2-2
Rear Topper Window. 2-2
Side Topper Window. 2-2

Your Driving, The Road and Your Vehicle. 4-2
Loading Your Vehicle. 4-2

Contents

Section 1 Seats and Restraints 4
Troop Seat Operation 5
Folding the Seat Down 5
Troop Seats (If Equipped) 5
Folding the Seat Up 6
Restraints 7
Rear Safety Strap 7
Section 2 Features and Controls 9
Closing Rear Window Door 10
Opening the Rear Window Door 10
Windows 10
Rear Topper Window 10
Closing the Side Window Doors 10
Side Topper Window 10
Open the Side Window Doors 10
Closing the Rear Window 11
Sliding Rear Window 11

Opening the Rear Window 11
Starting and Operating 11
Your Vehicle 11
Starting Your Engine 11
Fuel Fired Coolant Heater 12
Fuel Fired Coolant Heater Operation 12
Rolling Up the Side Panels: 13
Storage Areas 13
Cargo Cover-Soft Top (If Equipped) 13
Storing the Cargo Cover: 13
Cargo Tie Downs (If Equipped) 15
Weapons Mount 16
Floor Mount Weapon Mount (Crew Cab) 16
Mounting the Weapon 16
Behind Seat Weapon Mount (Standard Cab) 17
Lower Weapon Holder 17
Upper Weapon Holder 17
Section 3 Instrument Panel 19
Blackout Drive Light 21